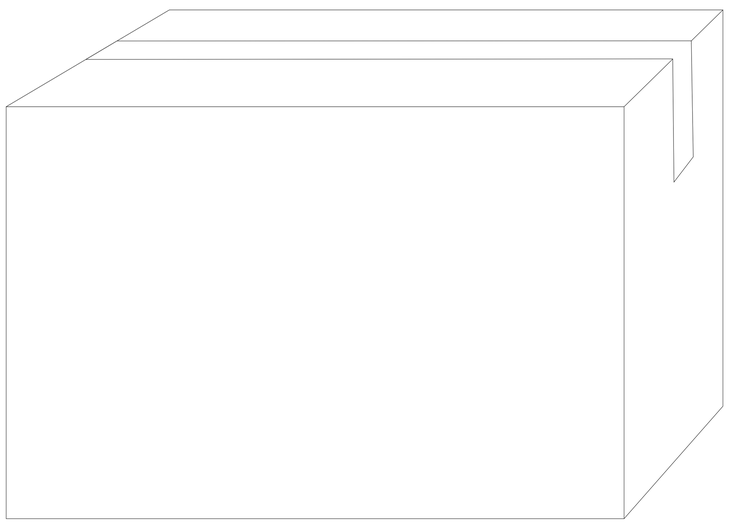

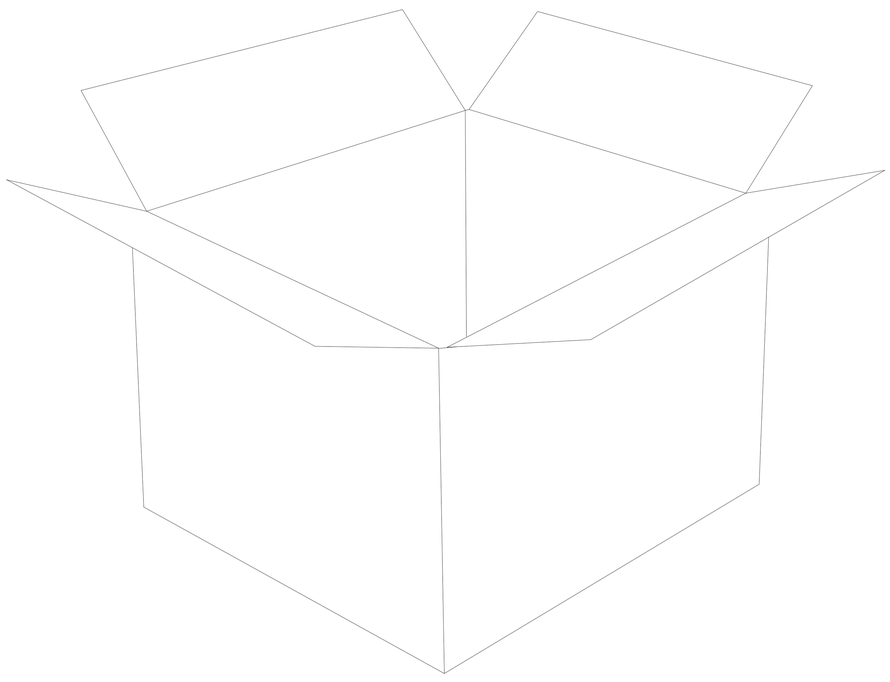

TOP VIEW

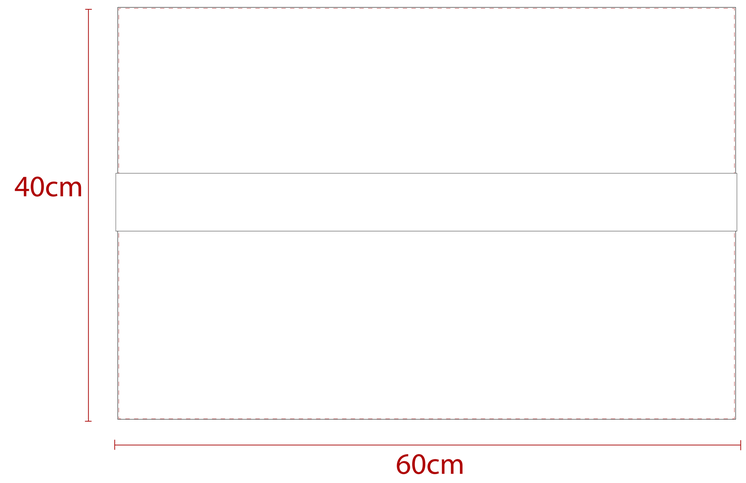


FRONT VIEW

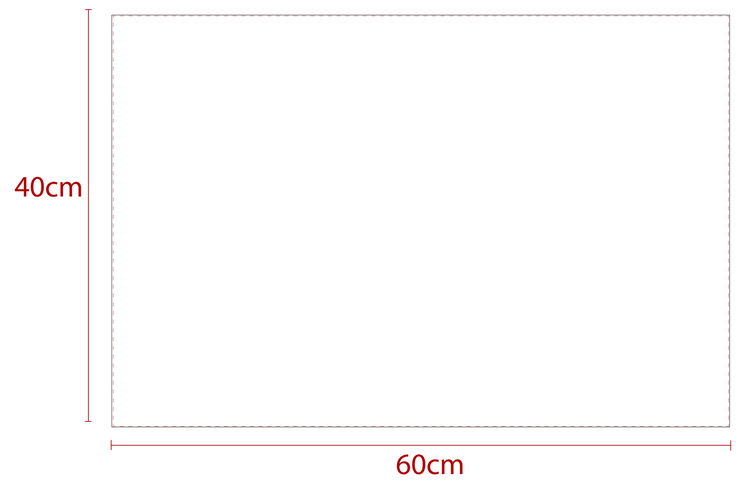


SIDE VIEW

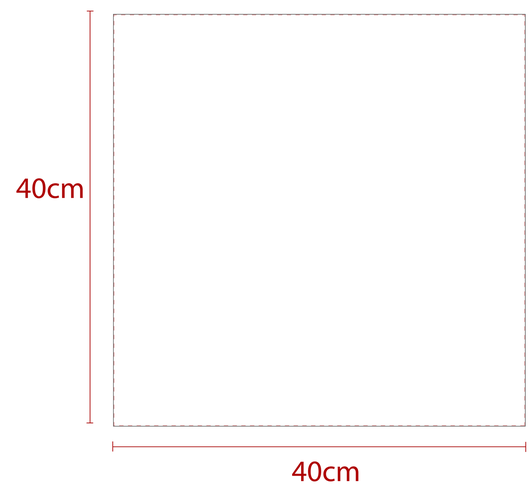


# 100% Scale

Product Name :

Large Carton Box – 60 × 40 × 40 cm

Qty :

Product Code :

IGPKG53

Product Size :

60cm x 40cm x 40cm

PO Number :

Print Size/s :

Print Colour/s :

Decoration Methods Available

Sublimation: All Over

Colour

Full Color