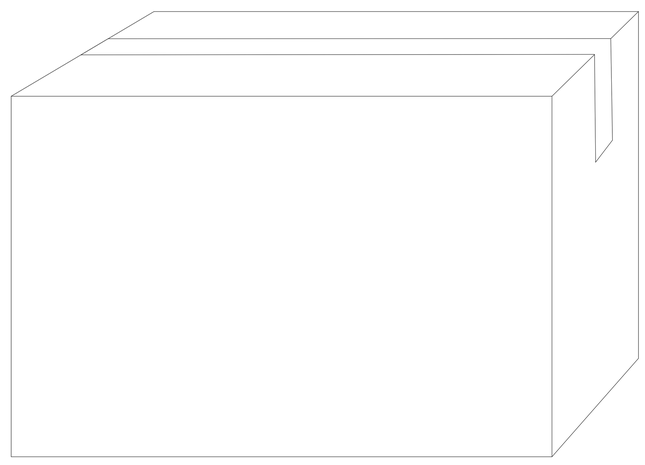

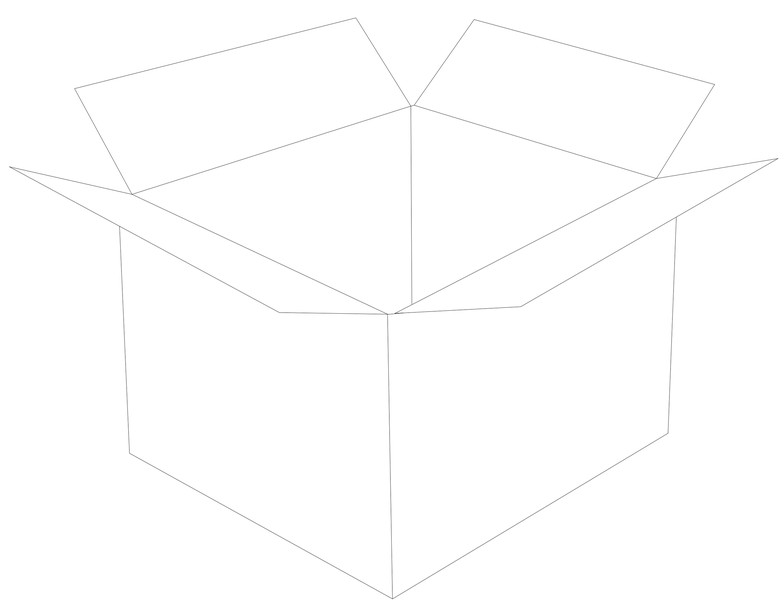

TOP VIEW

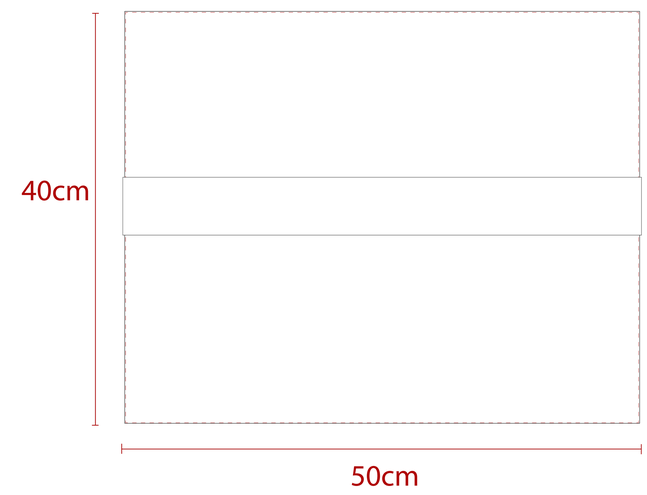

FRONT VIEW

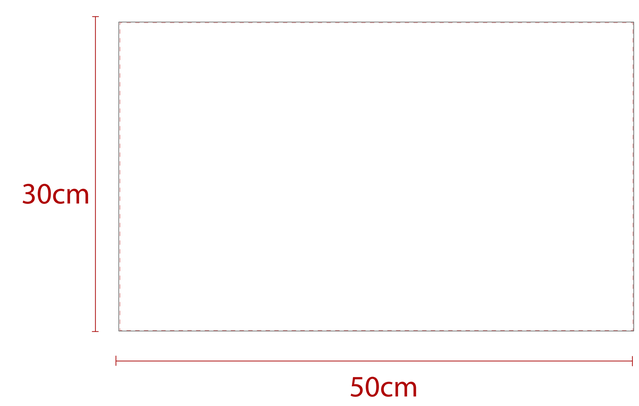

SIDE VIEW

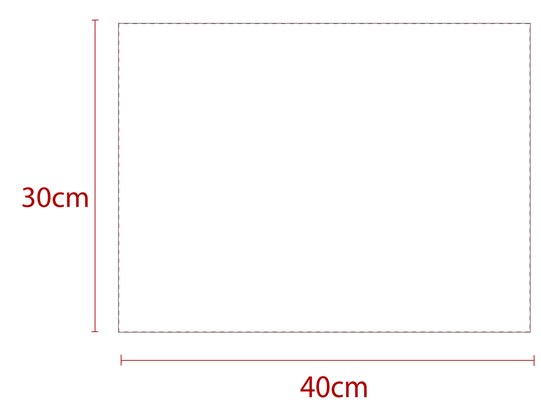

100% Scale

Product Name :

Medium Carton Box
– 50 × 40 × 30 cm

Qty :

Product Code :

IGPKG52

Product Size :

50cm x 40cm x 30cm

PO Number :

Print Size/s :

Print Colour/s :

Decoration Methods Available

Sublimation: All Over

Colour

Full Color