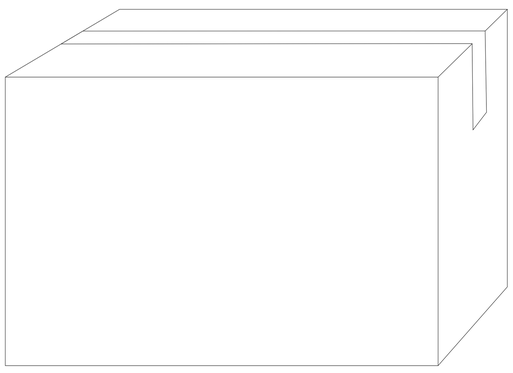

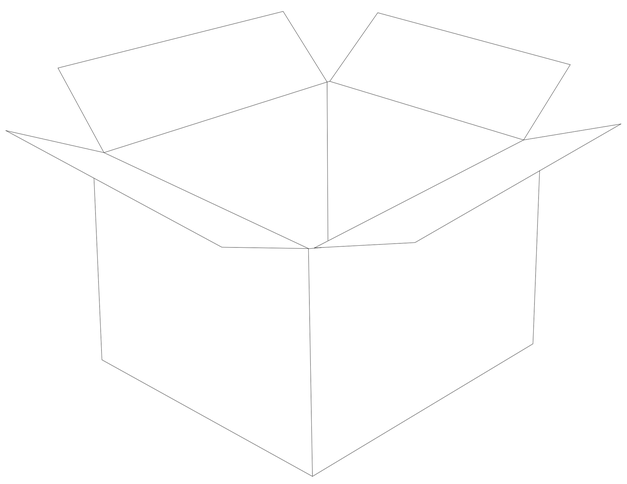

TOP VIEW

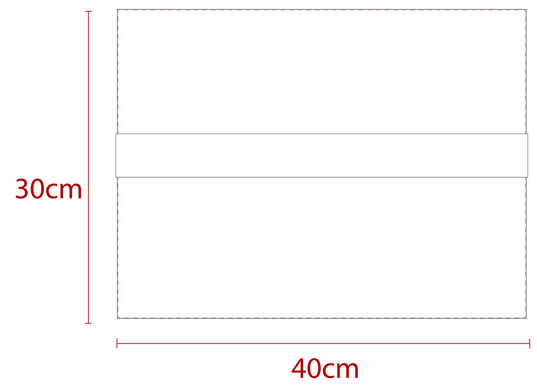

FRONT VIEW

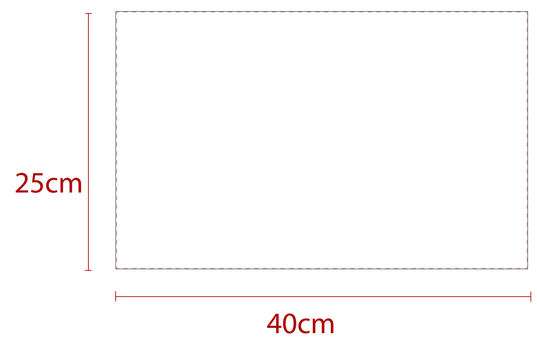

SIDE VIEW

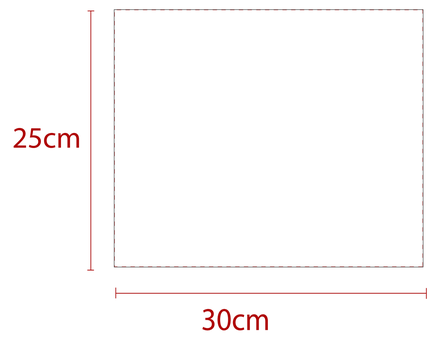

100% Scale

Product Name :

Small Carton Box – 40 × 30 × 25 cm

Qty :

Product Code :

IGPKG51

Product Size :

40cm × 30cm × 25 cm

PO Number :

Print Size/s :

Print Colour/s :

Decoration Methods Available

Sublimation: All Over

Colour

Full Color