Box

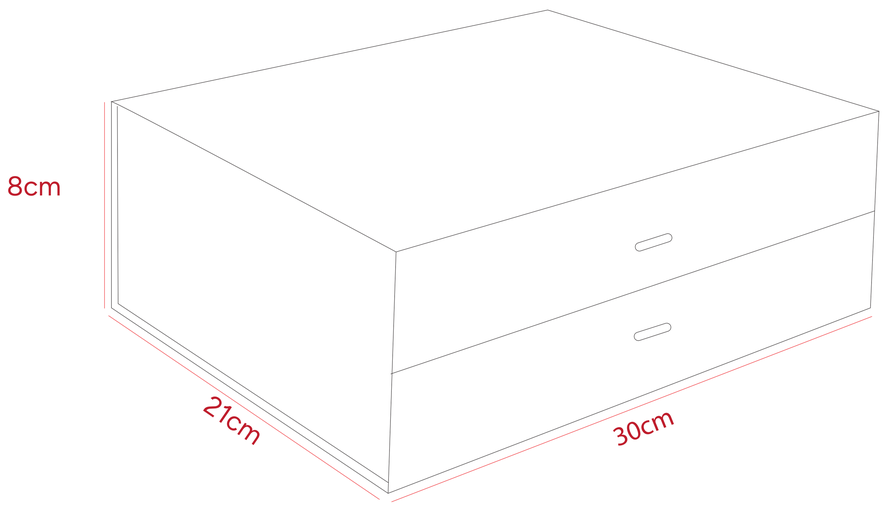

Ribbon

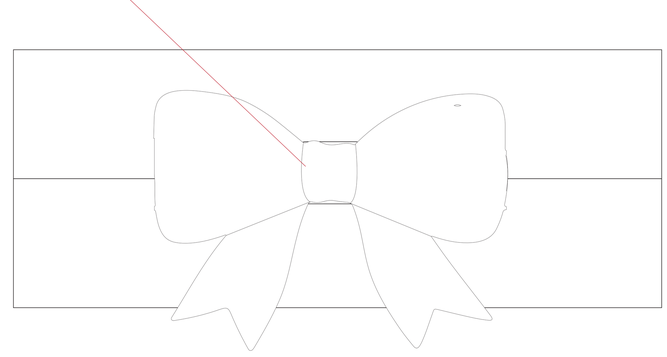

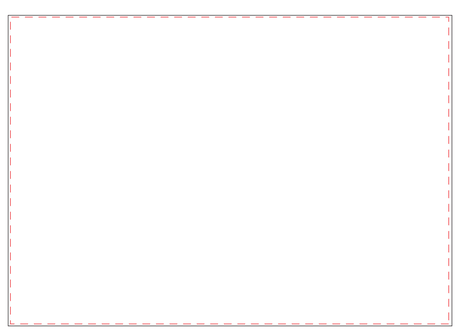

Sublimation All Over

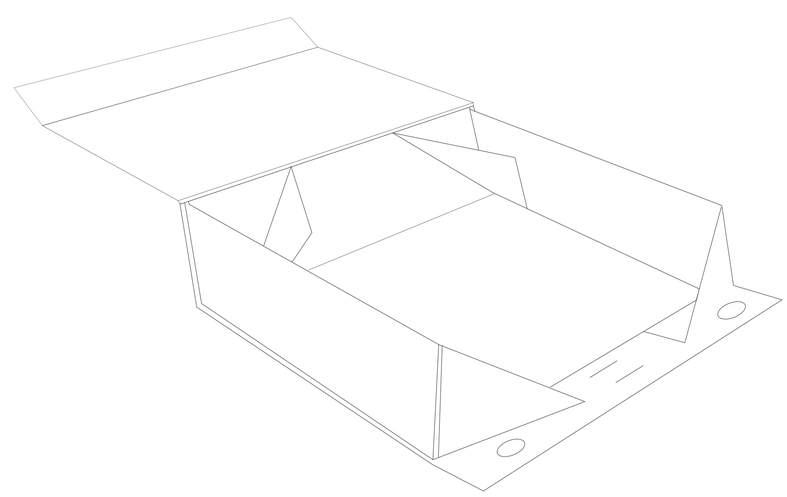

Open

100% Scale

Product Name :

Full Colour Magnetic Gift Box with Ribbon - Small

Qty :

Product Code :

IGPKG04

Product Size :

30cm x 21cm x 8cm

PO Number :

Print Size/s :

Print Colour/s :

Decoration Methods Available

Sublimation: All Over

Colour

Full Color

Ribbon Color

Red

Hot Pink

Pink

Light Pink

Orange

Yellow

Cream

Green

Lime Green

Mint Green

Light Blue

Royal Blue

Navy Blue

Lilac

Purple

White