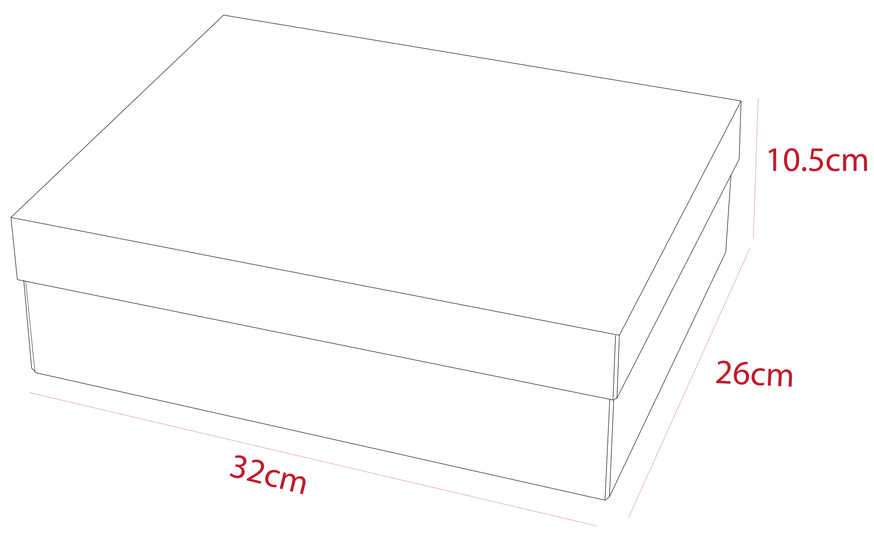

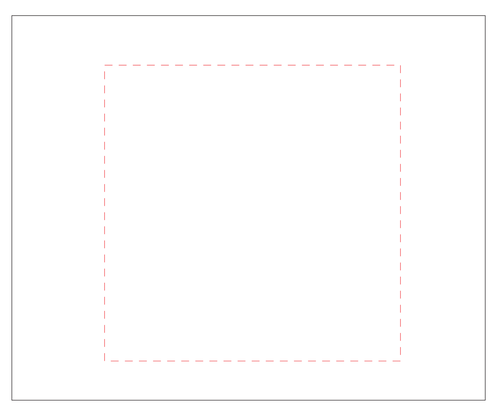

100% Scale

Product Name :

Natural Cardboard Gift Box - Medium

Qty :

Product Code :

IGPKG02

Product Size :

32cm × 26cm ×10.5 cm

PO Number :

Print Size/s :

Print Colour/s :

Decoration Methods Available

Screen Print: 20cm x 20cm

Colour

Natural