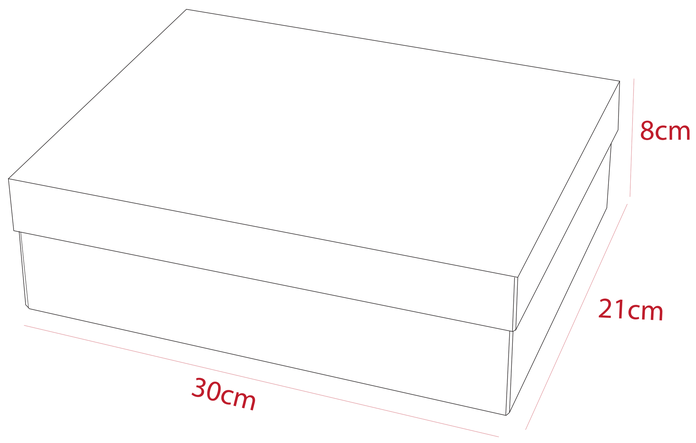

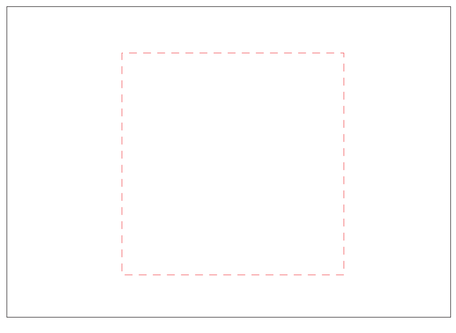

100% Scale

Product Name :

Natural Cardboard Gift Box - Small

Qty :

Product Code :

IGPKG01

Product Size :

30cm × 21cm ×8cm

PO Number :

Print Size/s :

Print Colour/s :

Decoration Methods Available

Screen Print: 15cm x 15cm

Colour

Natural