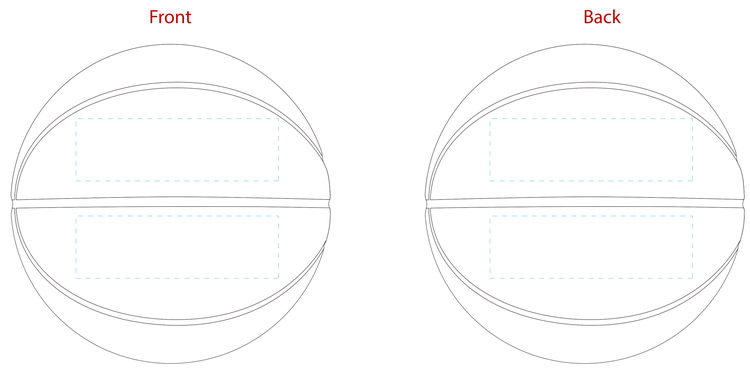

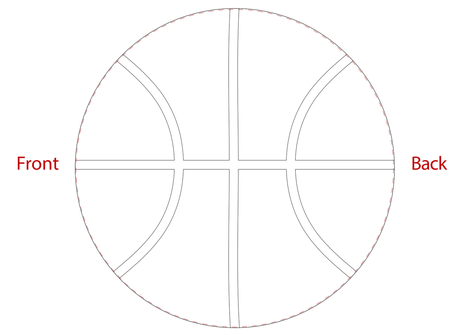

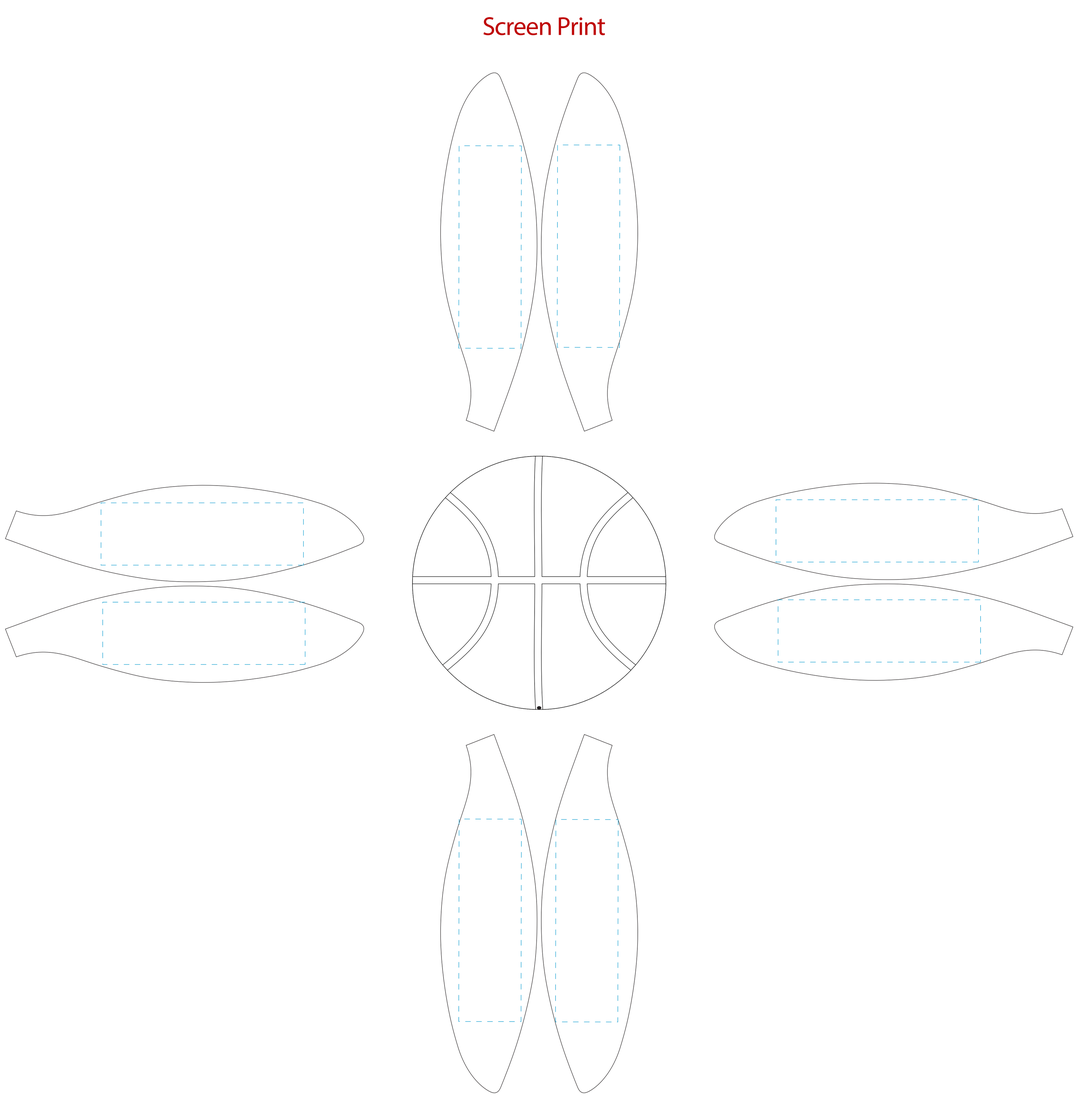

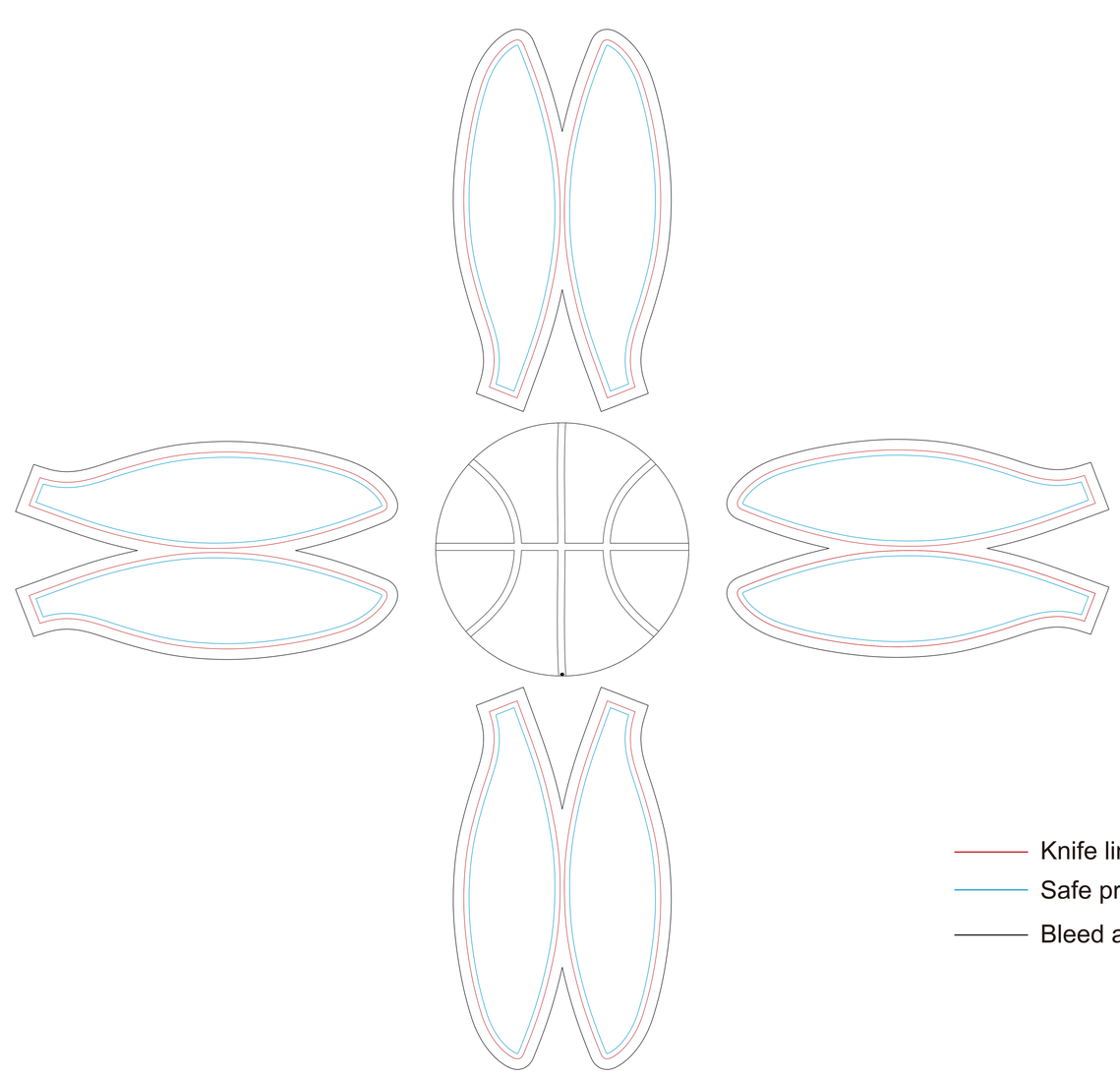

100% Scaled

Product Name :

Children's Basketball - Size 4

Qty :

Product Code :

IGBL02A

Product Size :

Size 4 (Diameter 20.5cm)

PO Number :

Print Size/s :

Print Colour/s :

Decoration Methods Available

Sublimation Print : All Over

Screen Print - 13cm x 4cm

Colours

Full Colour